© 2021 All rights reserved.
This document may not, in whole or in part, be copied, photocopied, reproduced, translated or converted to any electronic or machine readable from without prior written permission of Mehmet Günce Akkoyun.
Engineer contact : akkoyun@me.com

Property of -

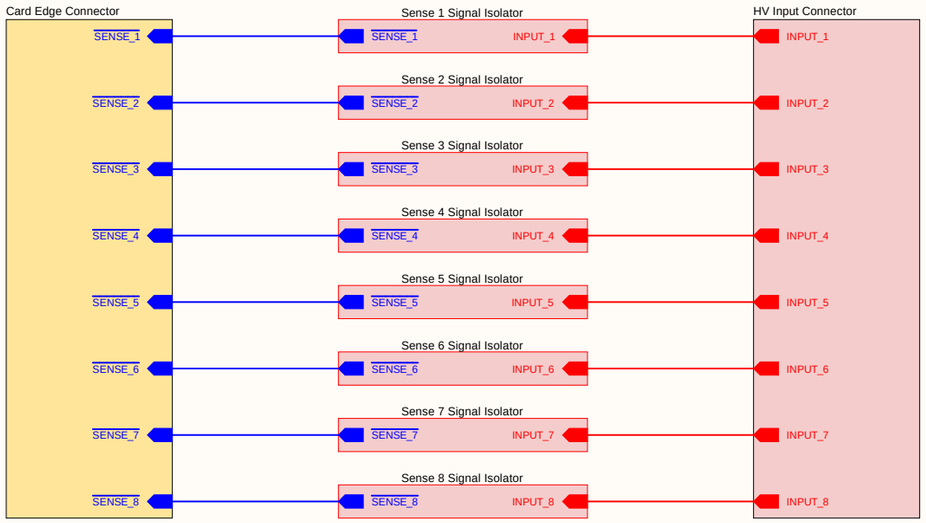

www.github.com/akkoyun/B302

B302 Block Diagram		Engineer : Gunce Akkoyun	-
		Customer : -	
Size : A4	Project : 220V to TTL Input Module	Product ID : B302	Seker Mah. Ayyildiz Sok. Silverstar Apt. 7/7 Selcuklu / Konya Türkiye
		Module ID : B302	
Date : 31.01.2026	Time : 12:44:07 Page : 1 / 11	Version : 00.00.01	
File : Block Diagram.SchDoc		Revision : DA	

Copyright 2026 Gunce Akkoyun (Commercial Secret)

© 2021 All rights reserved.
This document may not, in whole or in part, be copied, photocopied, reproduced, translated or converted to any electronic or machine readable from without prior written permission of Mehmet Günce Akkoyun.
Engineer contact : akkoyun@me.com

Property of -

J1

Bus Type : Mini PCI Express
Mating Connector : TE 2041262-1
Pitch : 0.8 mm
Number of Positions : 52

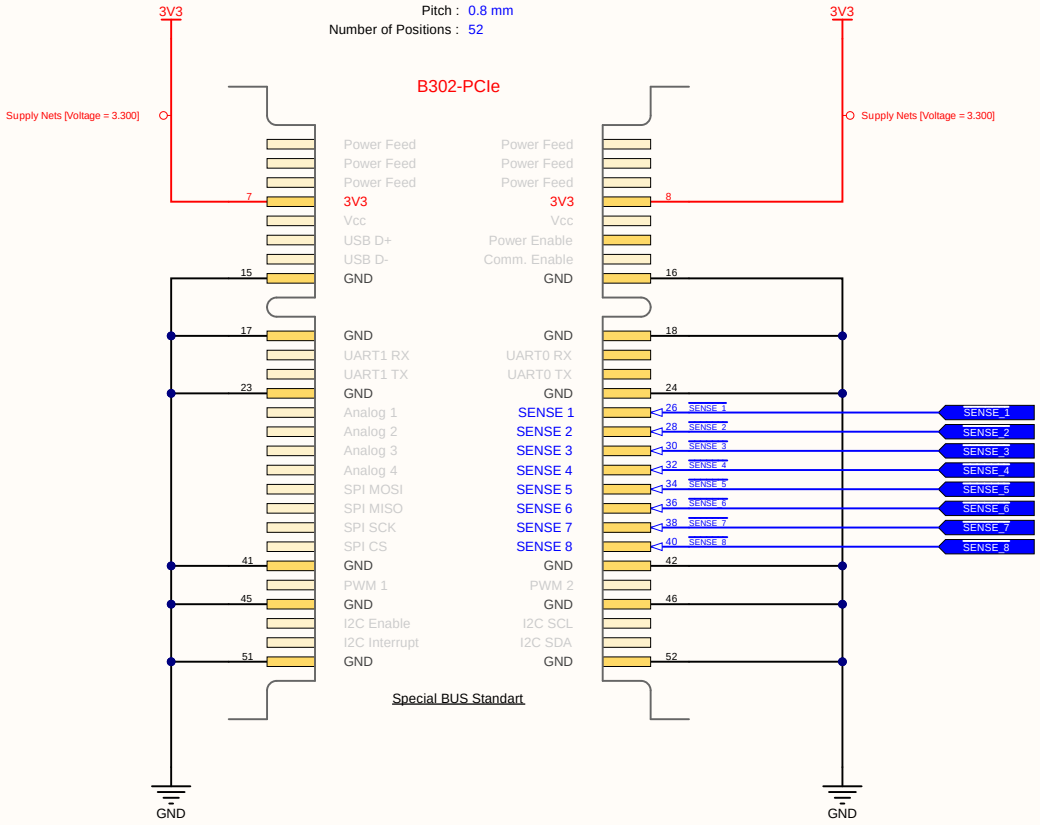

www.github.com/akkoyun/B302

Card Edge Connector		Engineer : Gunce Akkoyun	-
		Customer : -	
Size : A4	Project : 220V to TTL Input Module	Product ID : B302	Seker Mah. Ayyildiz Sok.
		Module ID : B302	Silverstar Apt. 7/7
Date : 31.01.2026	Time : 12:44:07 Page : 2 / 11	Version : 00.00.01	Selcuklu / Konya Türkiye
File : Card Edge Connector.SchDoc		Revision : DA	

Copyright 2026 Gunce Akkoyun (Commercial Secret)

© 2021 All rights reserved.
This document may not, in whole or in part, be copied, photocopied, reproduced, translated or converted to any electronic or machine readable from without prior written permission of Mehmet Günce Akkoyun.
Engineer contact : akkoyun@me.com

Property of -

Nominal: 230 Vac (phase–neutral)
Worst-case: 400 Vac (phase–phase)

Total resistance: 720 kΩ (4 × 180 kΩ / 0.5 W – 0805)

At 230 Vac:
I ≈ 230 / 720k = 0.32 mA
P_total = V² / R = 230² / 720k = 0.073 W
P_per 180 kΩ ≈ 0.018 W (18 mW)

At 400 Vac (worst-case):
I ≈ 400 / 720k = 0.56 mA
P_total = 400² / 720k = 0.222 W
P_per 180 kΩ ≈ 0.056 W (56 mW)

Thermal check (per resistor):
(180 kΩ / 0805 / 0.5 W)
→ P_max = 0.056 W ≈ 11 % load
→ ΔT ≈ P × RΘ = 0.056 W × (200–250 °C/W) ≈ +11 – 14 °C
→ T_resistor ≈ 60 °C + ΔT ≈ 71 – 74 °C < 155 °C (max)

Safe operating region confirmed
All resistors within voltage, power, and thermal limits.

PCB copper clearance must be greather than 6 mm accourding to IPC9592.

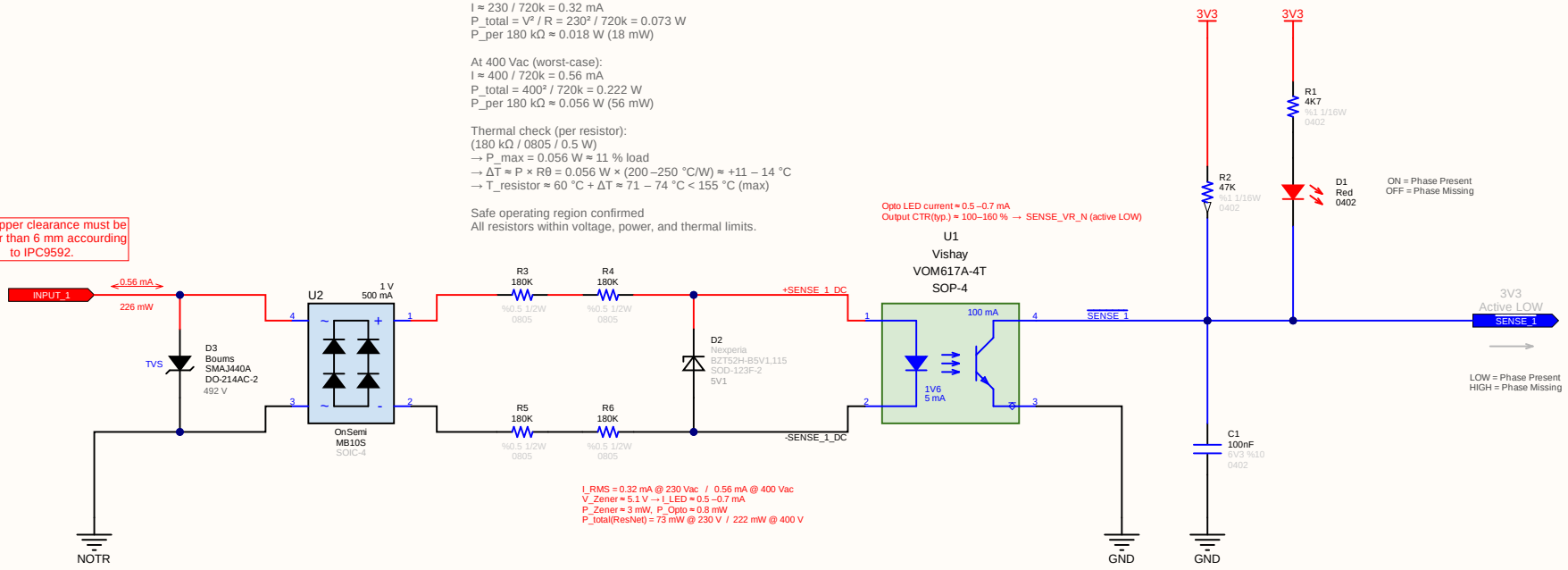

www.github.com/akkoyun/B302

Signal 1 Isolator		Engineer : Gunce Akkoyun	-
		Customer : -	
Size : A4	Project : 220V to TTL Input Module	Product ID : B302	Seker Mah. Ayyildiz Sok.
		Module ID : B302	Silverstar Apt. 7/7
Date : 31.01.2026	Time : 12:44:07 Page : 3 / 11	Version : 00.00.01	Selcuklu / Konya Türkiye
File : Sense 1 Signal Isolation.SchDoc		Revision : DA	

Copyright 2026 Gunce Akkoyun (Commercial Secret)

© 2021 All rights reserved.
This document may not, in whole or in part, be copied, photocopied, reproduced, translated or converted to any electronic or machine readable from without prior written permission of Mehmet Günce Akkoyun.
Engineer contact : akkoyun@me.com

Property of -

Nominal: 230 Vac (phase–neutral)
Worst-case: 400 Vac (phase–phase)

Total resistance: 720 kΩ (4 × 180 kΩ / 0.5 W – 0805)

At 230 Vac:
I ≈ 230 / 720k = 0.32 mA
P_total = V² / R = 230² / 720k = 0.073 W
P_per 180 kΩ ≈ 0.018 W (18 mW)

At 400 Vac (worst-case):
I ≈ 400 / 720k = 0.56 mA
P_total = 400² / 720k = 0.222 W
P_per 180 kΩ ≈ 0.056 W (56 mW)

Thermal check (per resistor):
(180 kΩ / 0805 / 0.5 W)
→ P_max = 0.056 W ≈ 11 % load
→ ΔT ≈ P × Rθ = 0.056 W × (200–250 °C/W) ≈ +11 – 14 °C
→ T_resistor ≈ 60 °C + ΔT ≈ 71 – 74 °C < 155 °C (max)

Safe operating region confirmed
All resistors within voltage, power, and thermal limits.

PCB copper clearance must be greather than 6 mm accourding to IPC9592.

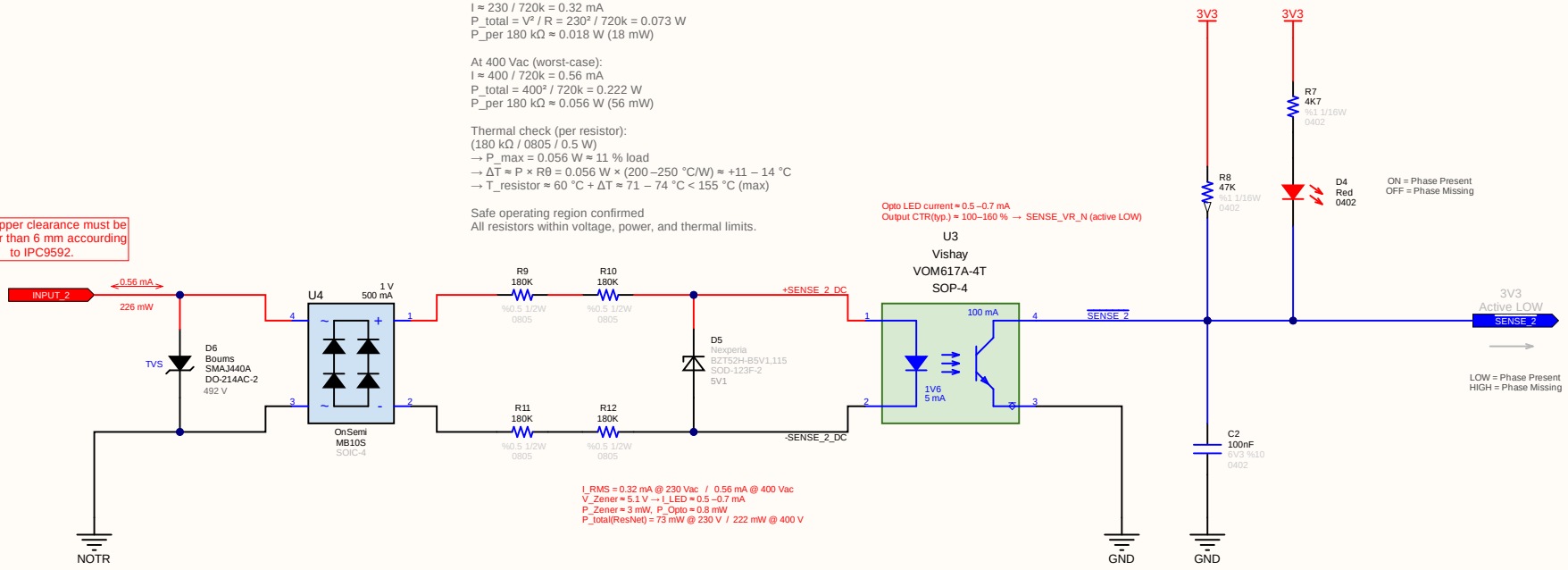

www.github.com/akkoyun/B302

Signal 2 Isolator		Engineer : Gunce Akkoyun	-
		Customer : -	
Size : A4	Project : 220V to TTL Input Module	Product ID : B302	Seker Mah. Ayyildiz Sok.
		Module ID : B302	Silverstar Apt. 7/7
Date : 31.01.2026	Time : 12:44:07 / Page : 4 / 11	Version : 00.00.01	Selcuklu / Konya Türkiye
File : Sense 2 Signal Isolation.SchDoc		Revision : DA	

Copyright 2026 Gunce Akkoyun (Commercial Secret)

© 2021 All rights reserved.
This document may not, in whole or in part, be copied, photocopied, reproduced, translated or converted to any electronic or machine readable from without prior written permission of Mehmet Günce Akkoyun.
Engineer contact : akkoyun@me.com

Property of -

Nominal: 230 Vac (phase–neutral)
Worst-case: 400 Vac (phase–phase)

Total resistance: 720 kΩ (4 × 180 kΩ / 0.5 W – 0805)

At 230 Vac:
I ≈ 230 / 720k = 0.32 mA
P_total = V² / R = 230² / 720k = 0.073 W
P_per 180 kΩ ≈ 0.018 W (18 mW)

At 400 Vac (worst-case):
I ≈ 400 / 720k = 0.56 mA
P_total = 400² / 720k = 0.222 W
P_per 180 kΩ ≈ 0.056 W (56 mW)

Thermal check (per resistor):
(180 kΩ / 0805 / 0.5 W)
→ P_max = 0.056 W ≈ 11 % load
→ ΔT ≈ P × RΘ = 0.056 W × (200–250 °C/W) ≈ +11 – 14 °C
→ T_resistor ≈ 60 °C + ΔT ≈ 71 – 74 °C < 155 °C (max)

Safe operating region confirmed
All resistors within voltage, power, and thermal limits.

PCB copper clearance must be greather than 6 mm accourding to IPC9592.

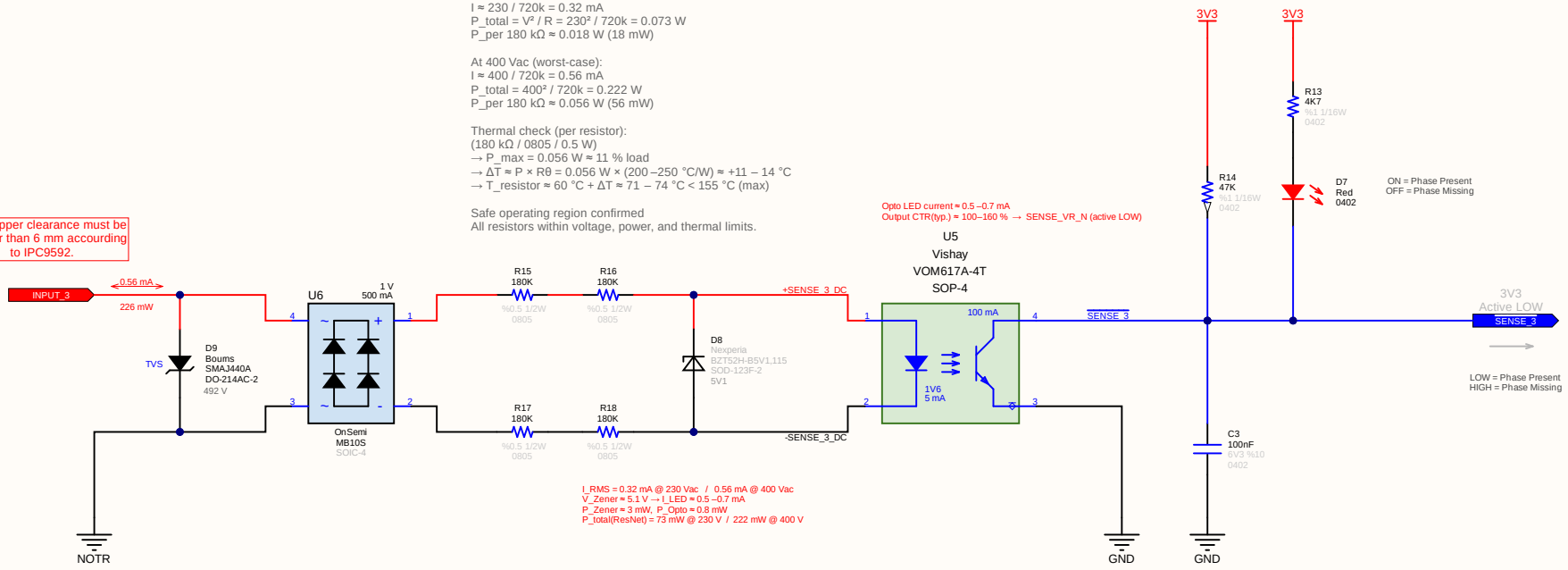

I_RMS = 0.32 mA @ 230 Vac / 0.56 mA @ 400 Vac
V_Zener ≈ 5.1 V → I_LED ≈ 0.5 –0.7 mA
P_Zener ≈ 3 mW, P_Opto ≈ 0.8 mW
P_total(ResNet) = 73 mW @ 230 V / 222 mW @ 400 V

www.github.com/akkoyun/B302

Signal 3 Isolator		Engineer : Gunce Akkoyun	-
		Customer : -	
Size : A4	Project : 220V to TTL Input Module	Product ID : B302	Seker Mah. Ayyildiz Sok.
		Module ID : B302	Silverstar Apt. 7/7
Date : 31.01.2026	Time : 12:44:07 Page : 5 / 11	Version : 00.00.01	Selcuklu / Konya Türkiye
File : Sense 3 Signal Isolation.SchDoc		Revision : DA	

Copyright 2026 Gunce Akkoyun (Commercial Secret)

© 2021 All rights reserved.
This document may not, in whole or in part, be copied, photocopied, reproduced, translated or converted to any electronic or machine readable from without prior written permission of Mehmet Günce Akkoyun.
Engineer contact : akkoyun@me.com

Property of -

Nominal: 230 Vac (phase–neutral)
Worst-case: 400 Vac (phase–phase)

Total resistance: 720 kΩ (4 × 180 kΩ / 0.5 W – 0805)

At 230 Vac:
I ≈ 230 / 720k = 0.32 mA
P_total = V² / R = 230² / 720k = 0.073 W
P_per 180 kΩ ≈ 0.018 W (18 mW)

At 400 Vac (worst-case):
I ≈ 400 / 720k = 0.56 mA
P_total = 400² / 720k = 0.222 W
P_per 180 kΩ ≈ 0.056 W (56 mW)

Thermal check (per resistor):
(180 kΩ / 0805 / 0.5 W)
→ P_max = 0.056 W ≈ 11 % load
→ ΔT ≈ P × Rθ = 0.056 W × (200–250 °C/W) ≈ +11 – 14 °C
→ T_resistor ≈ 60 °C + ΔT ≈ 71 – 74 °C < 155 °C (max)

Safe operating region confirmed
All resistors within voltage, power, and thermal limits.

PCB copper clearance must be greather than 6 mm accourding to IPC9592.

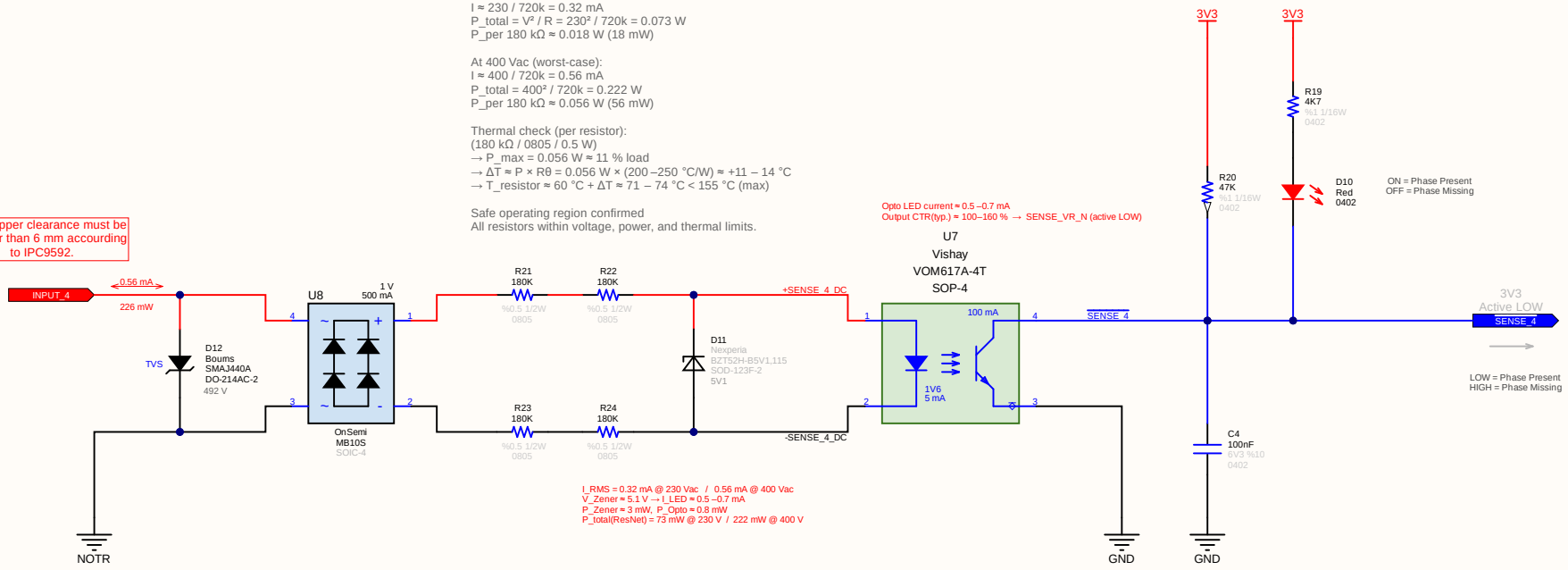

www.github.com/akkoyun/B302

Signal 4 Isolator		Engineer : Gunce Akkoyun	-
		Customer : -	
Size : A4	Project : 220V to TTL Input Module	Product ID : B302	Seker Mah. Ayyildiz Sok.
		Module ID : B302	Silverstar Apt. 7/7
Date : 31.01.2026	Time : 12:44:07 Page : 6 / 11	Version : 00.00.01	Selcuklu / Konya Türkiye
File : Sense 4 Signal Isolation.SchDoc		Revision : DA	

Copyright 2026 Gunce Akkoyun (Commercial Secret)

© 2021 All rights reserved.
This document may not, in whole or in part, be copied, photocopied, reproduced, translated or converted to any electronic or machine readable from without prior written permission of Mehmet Günce Akkoyun.
Engineer contact : akkoyun@me.com

Property of -

Nominal: 230 Vac (phase–neutral)
Worst-case: 400 Vac (phase–phase)

Total resistance: 720 kΩ (4 × 180 kΩ / 0.5 W – 0805)

At 230 Vac:
I ≈ 230 / 720k = 0.32 mA
P_total = V² / R = 230² / 720k = 0.073 W
P_per 180 kΩ ≈ 0.018 W (18 mW)

At 400 Vac (worst-case):
I ≈ 400 / 720k = 0.56 mA
P_total = 400² / 720k = 0.222 W
P_per 180 kΩ ≈ 0.056 W (56 mW)

Thermal check (per resistor):
(180 kΩ / 0805 / 0.5 W)
→ P_max = 0.056 W ≈ 11 % load
→ ΔT ≈ P × Rθ = 0.056 W × (200–250 °C/W) ≈ +11 – 14 °C
→ T_resistor ≈ 60 °C + ΔT ≈ 71 – 74 °C < 155 °C (max)

Safe operating region confirmed
All resistors within voltage, power, and thermal limits.

PCB copper clearance must be greather than 6 mm accourding to IPC9592.

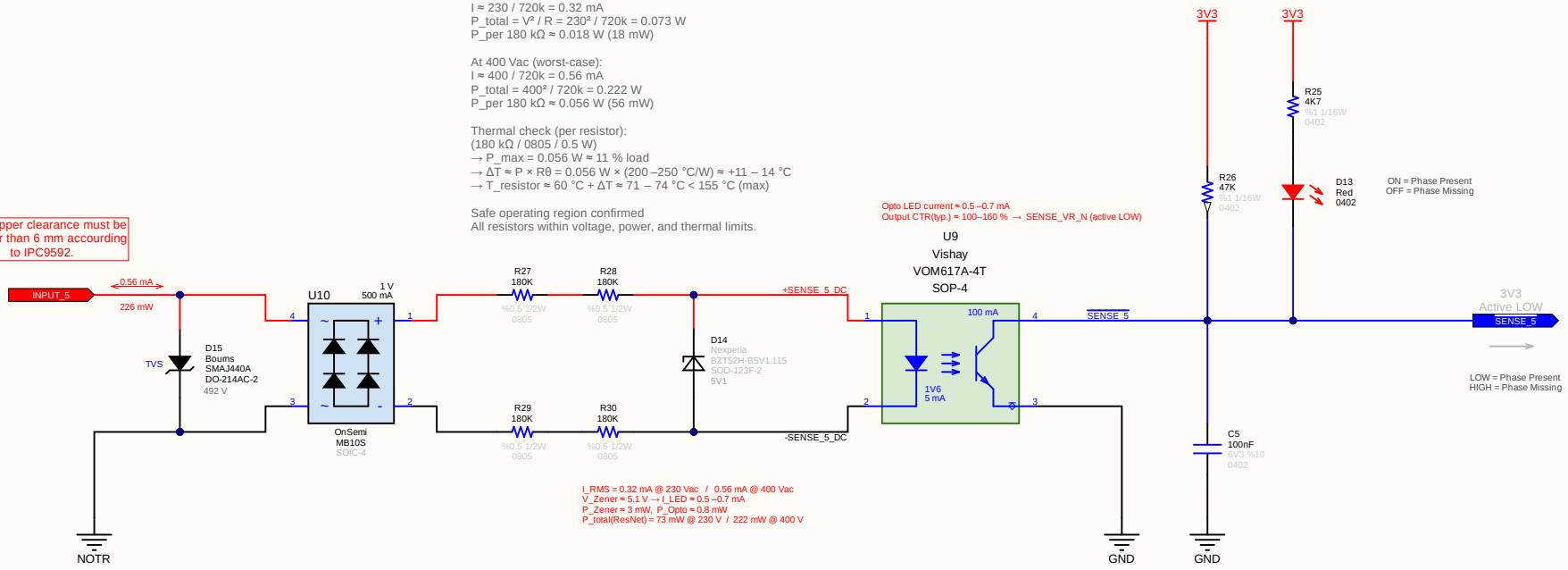

www.github.com/akkoyun/B302

Signal 5 Isolator		Engineer : Gunce Akkoyun	-
		Customer : -	
Size : A4	Project : 220V to TTL Input Module	Product ID : B302	Seker Mah. Ayyildiz Sok.
		Module ID : B302	Silverstar Apt. 7/7
Date : 31.01.2026	Time : 12:44:07	Page : 7 / 11	Version : 00.00.01	Selcuklu / Konya Türkiye
File : Sense 5 Signal Isolation.SchDoc		Revision : DA	

Copyright 2026 Gunce Akkoyun (Commercial Secret)

© 2021 All rights reserved.
This document may not, in whole or in part, be copied, photocopied, reproduced, translated or converted to any electronic or machine readable from without prior written permission of Mehmet Günce Akkoyun.
Engineer contact : akkoyun@me.com

Property of -

Nominal: 230 Vac (phase–neutral)
Worst-case: 400 Vac (phase–phase)

Total resistance: 720 kΩ (4 × 180 kΩ / 0.5 W – 0805)

At 230 Vac:
I ≈ 230 / 720k = 0.32 mA
P_total = V² / R = 230² / 720k = 0.073 W
P_per 180 kΩ ≈ 0.018 W (18 mW)

At 400 Vac (worst-case):
I ≈ 400 / 720k = 0.56 mA
P_total = 400² / 720k = 0.222 W
P_per 180 kΩ ≈ 0.056 W (56 mW)

Thermal check (per resistor):
(180 kΩ / 0805 / 0.5 W)
→ P_max = 0.056 W ≈ 11 % load
→ ΔT ≈ P × Rθ = 0.056 W × (200–250 °C/W) ≈ +11 – 14 °C
→ T_resistor ≈ 60 °C + ΔT ≈ 71 – 74 °C < 155 °C (max)

Safe operating region confirmed
All resistors within voltage, power, and thermal limits.

PCB copper clearance must be greather than 6 mm accourding to IPC9592.

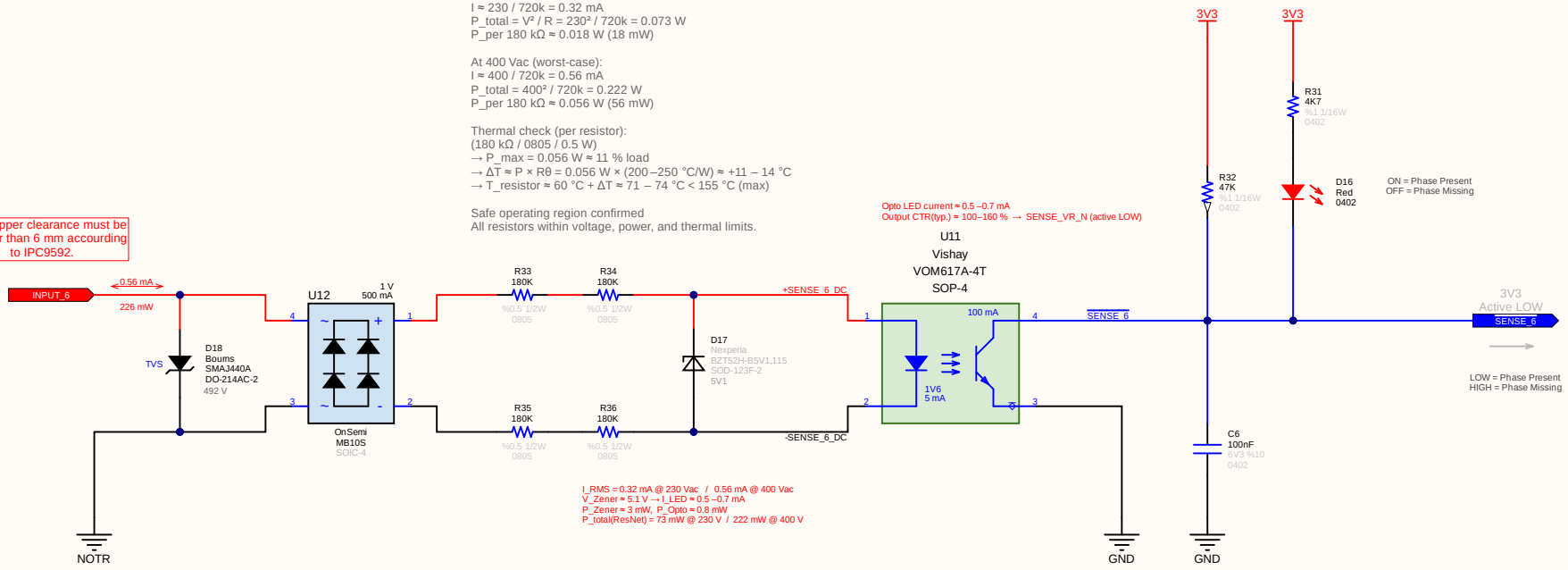

I_RMS = 0.32 mA @ 230 Vac / 0.56 mA @ 400 Vac
V_Zener ≈ 5.1 V → I_LED ≈ 0.5 –0.7 mA
P_Zener ≈ 3 mW, P_Opto ≈ 0.8 mW
P_total(ResNet) = 73 mW @ 230 V / 222 mW @ 400 V

www.github.com/akkoyun/B302

Signal 6 Isolator		Engineer : Gunce Akkoyun	-
		Customer : -	
Size : A4	Project : 220V to TTL Input Module	Product ID : B302	Seker Mah. Ayyildiz Sok.
		Module ID : B302	Silverstar Apt. 7/7
Date : 31.01.2026	Time : 12:44:08 Page : 8 / 11	Version : 00.00.01	Selcuklu / Konya Türkiye
File : Sense 6 Signal Isolation.SchDoc		Revision : DA	

Copyright 2026 Gunce Akkoyun (Commercial Secret)

© 2021 All rights reserved.
This document may not, in whole or in part, be copied, photocopied, reproduced, translated or converted to any electronic or machine readable from without prior written permission of Mehmet Günce Akkoyun.
Engineer contact : akkoyun@me.com

Property of -

Nominal: 230 Vac (phase–neutral)
Worst-case: 400 Vac (phase–phase)

Total resistance: 720 kΩ (4 × 180 kΩ / 0.5 W – 0805)

At 230 Vac:
I ≈ 230 / 720k = 0.32 mA
P_total = V² / R = 230² / 720k = 0.073 W
P_per 180 kΩ ≈ 0.018 W (18 mW)

At 400 Vac (worst-case):
I ≈ 400 / 720k = 0.56 mA
P_total = 400² / 720k = 0.222 W
P_per 180 kΩ ≈ 0.056 W (56 mW)

Thermal check (per resistor):
(180 kΩ / 0805 / 0.5 W)
→ P_max = 0.056 W ≈ 11 % load
→ ΔT ≈ P × Rθ = 0.056 W × (200–250 °C/W) ≈ +11 – 14 °C
→ T_resistor ≈ 60 °C + ΔT ≈ 71 – 74 °C < 155 °C (max)

Safe operating region confirmed
All resistors within voltage, power, and thermal limits.

PCB copper clearance must be greather than 6 mm accourding to IPC9592.

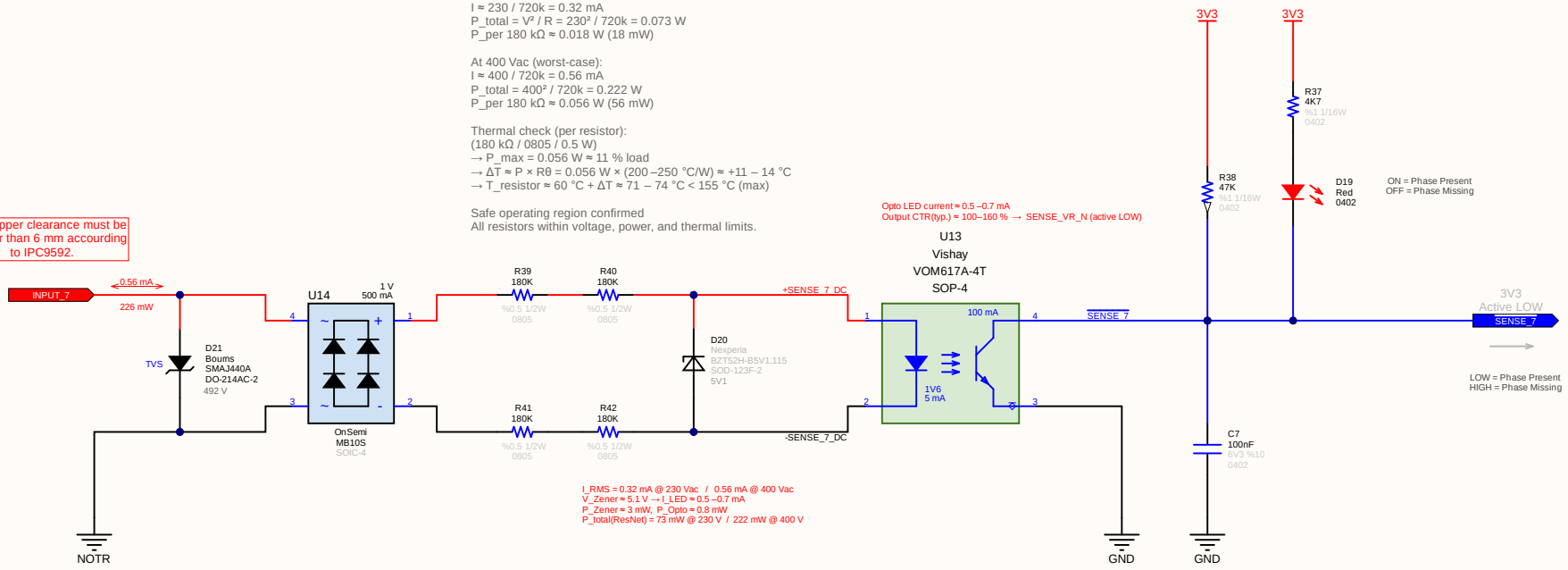

www.github.com/akkoyun/B302

Signal 7 Isolator		Engineer : Gunce Akkoyun	-
		Customer : -	
Size : A4	Project : 220V to TTL Input Module	Product ID : B302	Seker Mah. Ayyildiz Sok.
		Module ID : B302	Silverstar Apt. 7/7
Date : 31.01.2026	Time : 12:44:08	Page : 9 / 11	Version : 00.00.01	Selcuklu / Konya Türkiye
File : Sense 7 Signal Isolation.SchDoc		Revision : DA	

Copyright 2026 Gunce Akkoyun (Commercial Secret)

© 2021 All rights reserved.
This document may not, in whole or in part, be copied, photocopied, reproduced, translated or converted to any electronic or machine readable from without prior written permission of Mehmet Günce Akkoyun.
Engineer contact : akkoyun@me.com

Property of -

Nominal: 230 Vac (phase–neutral)
Worst-case: 400 Vac (phase–phase)

Total resistance: 720 kΩ (4 × 180 kΩ / 0.5 W – 0805)

At 230 Vac:
I ≈ 230 / 720k = 0.32 mA
P_total = V² / R = 230² / 720k = 0.073 W
P_per 180 kΩ ≈ 0.018 W (18 mW)

At 400 Vac (worst-case):
I ≈ 400 / 720k = 0.56 mA
P_total = 400² / 720k = 0.222 W
P_per 180 kΩ ≈ 0.056 W (56 mW)

Thermal check (per resistor):
(180 kΩ / 0805 / 0.5 W)
→ P_max = 0.056 W ≈ 11 % load
→ ΔT ≈ P × Rθ = 0.056 W × (200–250 °C/W) ≈ +11 – 14 °C
→ T_resistor ≈ 60 °C + ΔT ≈ 71 – 74 °C < 155 °C (max)

Safe operating region confirmed
All resistors within voltage, power, and thermal limits.

PCB copper clearance must be greather than 6 mm accourding to IPC9592.

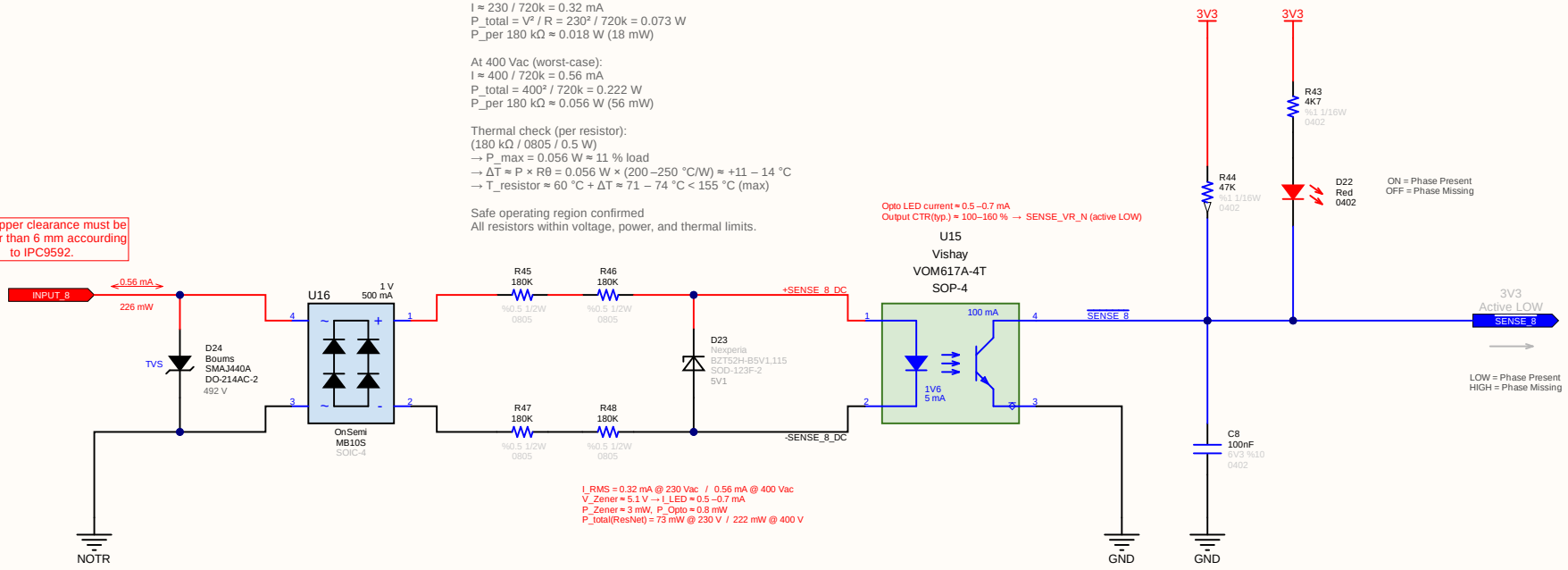

www.github.com/akkoyun/B302

Signal 8 Isolator		Engineer : Gunce Akkoyun	-
		Customer : -	
Size : A4	Project : 220V to TTL Input Module	Product ID : B302	Seker Mah. Ayyildiz Sok.
		Module ID : B302	Silverstar Apt. 7/7
Date : 31.01.2026	Time : 12:44:08 Page : 10 / 11	Version : 00.00.01	Selcuklu / Konya Türkiye
File : Sense 8 Signal Isolation.SchDoc		Revision : DA	

Copyright 2026 Gunce Akkoyun (Commercial Secret)

© 2021 All rights reserved.
This document may not, in whole or in part, be copied, photocopied, reproduced, translated or converted to any electronic or machine readable from without prior written permission of Mehmet Günce Akkoyun.
Engineer contact : akkoyun@me.com

Property of -

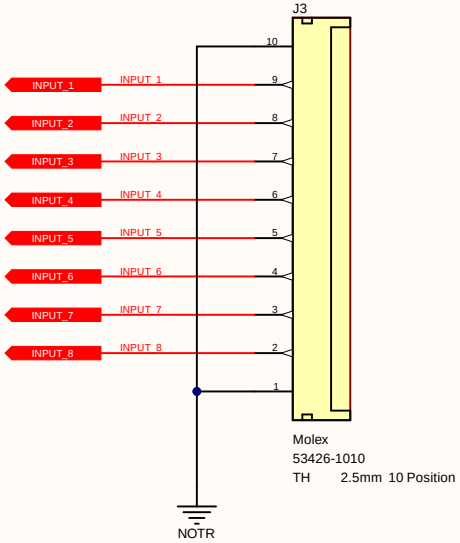

www.github.com/akkoyun/B302

220V (HV) Inpıt Connector		Engineer : Gunce Akkoyun	-
		Customer : -	
Size : A4	Project : 220V to TTL Input Module	Product ID : B302	Seker Mah. Ayyildiz Sok.
		Module ID : B302	Silverstar Apt. 7/7
Date : 31.01.2026	Time : 12:44:08 Page : 11 / 11	Version : 00.00.01	Selcuklu / Konya Türkiye
File : Input Connector.SchDoc		Revision : DA	

Copyright 2026 Gunce Akkoyun (Commercial Secret)